APA

Australia's energy infrastructure partner

Port Hedland Solar Farm: Exemption from 3.3.3.3(f) of the Harmonised Technical Rules

Final Decision

22 December 2025



1. Executive Summary

The Access Applicant (ADEWAP Pty Ltd in its capacity as a generator) is seeking connection for the Port Hedland Solar Farm (SF) within APA's existing Port Hedland Power Station at 33 kV and is seeking an exemption under part 64(1) of the Pilbara Network Rules (PNR) from clause 3.3.3.3(f) of the Harmonised Technical Rules (HTR).

ADEWAP Pty Ltd in its capacity as a Registered Network Service Provider (NSP) has reviewed and consulted on the proposed exemption, including seeking advice and approval from the Pilbara independent system operator (ISO) on whether it believes that it should be granted.

The NSP is satisfied that the exemption:

— is in accordance with Good Electricity Industry Practice (GEIP); and

— will not have any effect on the Registered NSPs and Network Users of its Network or any Network in the Power System.

The NSP's Final Decision is to grant the ADEWAP Pty Ltd an indefinite exemption from clause 3.3.3.3(f) of the Harmonised Technical Rules for the purposes of connecting the Port Hedland Solar Farm to the Port Hedland Power Station.

APA-INTERNAL

2. Exemption application

ADEWAP Pty Ltd in its capacity as a Registered Network Service Provider (NSP) received an exemption request from an Access Applicant (ADEWAP Pty Ltd in its capacity as a generator). The Access Applicant is seeking to connect the Port Hedland SF with APA's existing Port Hedland Power Station at 33kV as shown in figure 1.

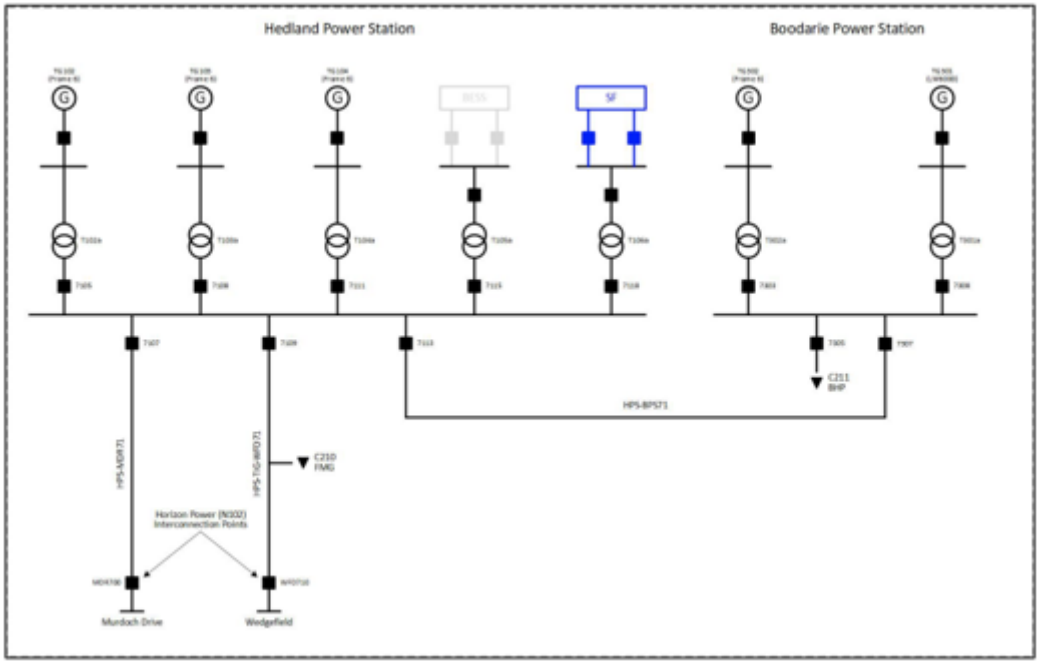

Figure 1 Overview of Port Hedland solar farm connection

Clause 3.3.3.3 of the Harmonised Technical Rules relates to Generating unit response to disturbances in the power system.

The Access Applicant is seeking an exemption from clause 3.3.3.3(f) of the HTR using part 64(1) of the PNR with a modified requirement be applied in lieu of 3.3.3.3(f) of the Harmonised Technical Rules as per following:

"After fault clearing the Port Hedland Solar Farm will revert to its normal Point of Connection (PoC) voltage droop control mode once the generating unit has exited the Low Voltage Ride Through mode (LVRT exits when the PoC voltage exceeds 0.85pu for more than 200ms and the inverter terminal voltage has exceeded 0.88pu).

Supply or absorption of reactive power following fault clearance and LVRT exit is subject to the current rating of the generating unit, the pre-fault active power and reactive power, the voltage setpoint and post-fault voltage."

2.1. Regulatory framework

The PNR establish rules for the operation, management, security and reliability of Pilbara networks and the functions of the ISO. The PNR incorporates the HTR which describe the technical performance requirements of the power system, and the obligations of network service providers to provide transmission and distribution systems that achieve these requirements.

Clause 3.3.3.3(f) of the Harmonised Technical Rules relates to Generating unit response to disturbances in the power system.

APA-INTERNAL

Clause 3.3.3.3(f) states:

"**Post-fault reactive power of a power station with non-synchronous generating units:**

After fault clearing, the power station in which a non-synchronous generating unit is located must not absorb reactive power from the transmission system or the distribution system. Any pre-fault absorption of reactive power has to be terminated within 200 ms after clearing of the fault. The absorption is permitted to recommence, if required by the applicable voltage control strategy, after the postfault voltages stabilise for at least 60 seconds at an above nominal value."

The procedures for the application and granting of an exemption from one or more requirements of the HTR are outlined in Part 64 of the PNR.

As the Facility in question is greater than 10 MVA, the NSP must consult with the ISO regarding the proposed exemption.[1] Furthermore, the NSP and the Access Applicant are also part of a Vertically Integrated NSP and as such, the NSP cannot grant an exemption without approval from the ISO[2].

Consequently, the NSP has consulted with the ISO regarding the Access Applicant's request for exemption in accordance with sections 64(3) and 64(4) of the PNR.

[1] Refer to section 64(4) of the Pilbara Network Rules
[2] Refer to section 64(3) of the Pilbara Network Rules.

APA-INTERNAL

3. Draft decision

The NSP released its Draft decision on the 20 November 2025 [3] that proposed granting the Access Applicant an exemption from clause 3.3.3.3.(f) of the HTR for an indefinite period.

The proposed exemption would not have any effect on the Registered NSPs and Network Users of its Network or any Network in the Power System.

Consultation on the Draft decision was open for submissions until the 19 December 2025 in accordance with the Expedited Consultation Process[4].

3.1. Stakeholder submissions

The NSP did not receive any submission on draft-decision from external stakeholders during the public consultation period

[3] Port Hedland Solar Farm: Exemption from 3.3.3.3 (f) of the Harmonised Technical Rules
[4] Refer to section A1.3 of the Pilbara Network Rules

APA-INTERNAL

4. Consultation with ISO

APA DEWAP has worked closely with the ISO throughout the access and connection process for the Port Hedland Solar Farm.

On 31 October 2025, the NSP requested the ISO review the Access Applicant's request for exemption from clause 3.3.3.3.h(2) of the HTR in accordance with sections 64(3) and 64(4) of the PNR and confirm whether the exemption poses any security risks and that it can be granted.

Under section 64(6), the ISO must as soon as practicable, and in any event within 4 weeks of the consultation commencing, determine, and advise the Registered NSP:

a) Whether the exemption is or is not likely to cause or contribute to any adverse impact on Security, Reliability or the Pilbara Electricity Objective, and
b) Whether the exemption is or is not consistent with the constrained access regime in Subchapter 9.1 of the Pilbara Network Rules; and
c) of any conditions the ISO recommends be placed on the exemption.

4.1 ISO advice

The ISO provided its advice[5] on APA DEWAP's exemption request for the Port Hedland Solar Farm from HTR clause 3.3.3.3(f) on the 13 November 2025.

The ISO concludes the proposed exemption is consistent with the constrained access regime in Subchapter 9.1 of the Rules. In drawing this conclusion, the ISO has considered the following matters:

a) The change will not impact the constraints in the existing constrained access regime.

b) The change will not impact the generation on the Registered NSP's network in responding to constraint directions consistent with the requirements of the Constrained Access Regime (to remain in balance).

c) The material provided in relation to the proposed exemption does not identify or interact with any legacy rights, build-out rights or other rights as contemplated in Subchapter 9.1 of the PNR.

Conditions to be Placed on Exemption: If the exemption is to be granted, the ISO recommends the following condition to be placed on the exemption:

If testing conducted through the Generation Monitoring Plan under HTR cl. 4.1.3 or other fault recordings shows that the facility performs better than outlined in this exemption, the exemption will be reconsidered.

[5] Advice on APA DEWAP's Exemption Request

APA-INTERNAL

5. Final decision

The NSP's Draft decision was to grant the Access Applicant an exemption from clause 3.3.3.3(f) of the HTR for an indefinite period with no proposed conditions.

The NSP is satisfied that the exemption:

— is granted in accordance with GEIP and Pilbara Electricity Objectives; and

— will not have any effect on the Registered NSPs and Network Users of its Network or any Network in the Power System.

The ISO has also provided its advice on the exemption request including recommending a condition for granting the exemption.

In making its decision, the NSP has considered its consultation with stakeholders and the advice received from the ISO, including its accompanying conditions. The NSP is satisfied that the Access Applicant's proposal for exemption fully accommodates the conditions proposed by the ISO.

The NSP's Final Decision is therefore to grant the exemption from clause 3.3.3.3(f) of the HTR subject to following condition:

1. If testing conducted through the Generation Monitoring Plan under HTR cl. 4.1.3 or other fault recordings shows that the facility performs better than outlined in this exemption, the exemption will be reconsidered.

The exemption is granted for an indefinite period.

APA-INTERNAL