APA

Australia's energy infrastructure partner

Port Hedland Solar Farm: Exemption from 3.3.3.3(h)(2) of the Harmonised Technical Rules

Draft Decision

22 May 2025



1. Summary

ADEWAP Pty Ltd in its capacity as a Registered Network Service Provider (**NSP**) has received an exemption request from an Access Applicant (also ADEWAP Pty Ltd in its capacity as a generator) under part 64(1) of the Pilbara Network Rules.

The Access Applicant is seeking an exemption from clause 3.3.3.3(h)(2) of the Pilbara Harmonised Technical Rules (HTR) for the Port Hedland Solar Farm (SF) that will be connected at 33 kV side of generator step-up transformer within APA's existing Port Hedland Power Station.

Figure 1 Overview of Porth Hedland solar farm connection

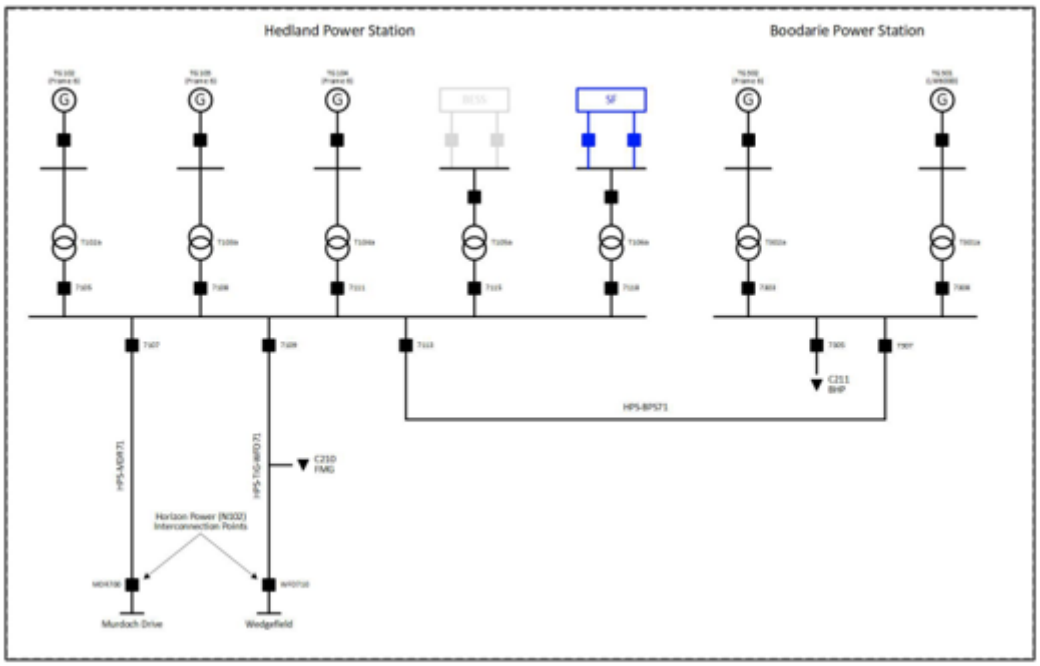

The NSP has reviewed the Access Applicant's request and consulted with the ISO.

The NSP is satisfied that the exemptions, are reasonably granted in accordance with Good Electricity Industry Practice (**GEIP**) and would not adversely impact Security, Reliability, or the Pilbara Electricity Objective.[1]

The NSP is seeking submissions in relation to the exemption request under an Expedited Consultation Process.

2. Exemption request

Clause 3.3.3.3 of the Harmonised Technical Rules relates to continuous uninterrupted operation. Clause 3.3.3.3(h) states:

> "**Continuous uninterrupted operation**
>
> For the purposes of this clause, a *generating unit* is considered to remain in continuous uninterrupted operation if:

[1] Under Part 8A of the *Electricity Industry Act 2004*, the Pilbara Electricity Objectives is to is to promote efficient investment in, and efficient operation and use of, services of Pilbara networks for the long-term interests of consumers of electricity in the Pilbara region in relation to —
(a) price, quality, safety, reliability and security of supply of electricity; and
(b) the reliability, safety and security of any interconnected Pilbara system.

(1) the generating unit is not disconnected from the network due to protection system operation.

(2) the *active power* output returns to the *generating unit's* pre-fault electric power output within 200 milliseconds after the voltage has returned to between 80% to 110% of nominal *voltage*. In making this assessment allowances may be made for:

(A) any variation in *active power* output for non-*synchronous generating units* due to variation in the primary source of *energy*; and

(B) any variation in *active power* output of *synchronous generating units* due to any reduction in the *power system frequency* in accordance with the capability of the *generating unit* as notified to the *NSP*.

(3) the *reactive power* control mode in which the *generating unit* was operating prior to the *credible contingency event* occurring does not *change*, unless it is required by subclause 3.3.3.3(f)."

The Access Applicant's solar farm facility's control strategy prioritises reactive current injection over active power during low-voltage events, to support voltage recovery. The facility's control strategy, combined with the requirement for stable active power control across all credible operating scenarios has demonstrated the active power recovery slightly below 100% within 200 milliseconds following fault clearance. Oversizing power conversion equipment to deliver maximum active power at 80% voltage would lead to significantly increased capital costs, which is inconsistent with the Pilbara Electricity Objective.

The Access Applicant has requested a modified requirement be applied in lieu of 3.3.3.3(h)(2) of the Harmonised Technical Rules as per the following table.

Table 1 Rule requirement and requested modified requirement for Solar Farm

Aspect	Clause 3.3.3.3(h)(2) requirement	Requested modified requirement
Voltage recovery range	80-110%	90-110%
Active Power Recovery	Return to the pre-fault value (100%)	Return to 99% of the pre-fault value
Time Requirement for Power Recovery	200 ms	200 ms

3. Consultation with ISO

The NSP and the Access Applicant are part of a Vertically Integrated NSP. As such, the NSP cannot grant an exemption without approval from the ISO.[2] Further, as the Facility is greater than 10 MVA, the NSP must consult with the ISO regarding the proposed exemptions.[3]

The NSP has consulted with the ISO regarding the Access Applicant's request for exemption in accordance with sections 64(3) and 64(4) of the Pilbara Network Rules.

In accordance with section 64(6) of the Pilbara Network Rules, the ISO must advise the NSP:

a) Whether the exemption is or is not likely to cause or contribute to any adverse impact on Security, Reliability or the Pilbara Electricity Objective, and
b) Whether the exemption is or is not consistent with the constrained access regime in Subchapter 9.1 of the Pilbara Network Rules; and
c) of any conditions the ISO recommends be placed on the exemption.

[2] Refer to section 64(3) of the Pilbara Network Rules.
[3] Refer to section 64(4) of the Pilbara Network Rules.

The ISO has provided its final advice on this exemption request.

The NSP has published ISO's letter of advice in conjunction with this draft decision to ensure stakeholders have access to relevant information during the consultation process.

4. Draft decision

The NSP is satisfied the exemption, if subject to conditions outlined below, is reasonably granted in accordance with GEIP and would not adversely impact Security, Reliability, or the Pilbara Electricity Objective.

In making this decision, the NSP has considered the following points:

- The equivalent clauses in Appendix 12 of the Wholesale Electricity Market Rules (A12.9.2.5 and A12.9.3.6) allow asynchronous generators to negotiate a more relaxed standard than the requirement in the Harmonised Technical Rules; and
- Increasing the size of power conversion equipment to meet the Harmonised Technical Rules clause would be contrary to the Pilbara Electricity Objective.

The NSP's draft decision is to accept the exemption conditional on the Connection Applicant meeting the modified requirement outlined in Table 1.

5. Request for submissions

The NSP invites written submissions on the Access Applicant's request and this draft decision.

Submission must be provided by 5:00pm WST on 17 June 2025. Any submissions not marked as confidential will be published on APA's website.

Submission should be emailed to: nwisnetworkaccessenq@apa.com.au