APA

Australia's energy infrastructure partner

Port Hedland Solar Farm: Exemption from 3.3.3.3 (f) of the Harmonised Technical Rules

Draft Decision

17 November 2025



1. Summary

ADEWAP Pty Ltd in its capacity as a Registered Network Service Provider (**NSP**) has received an exemption request from an Access Applicant (also ADEWAP Pty Ltd in its capacity as a generator) under part 64(1) of the Pilbara Network Rules.

The Access Applicant is seeking an exemption from clause 3.3.3.3 (f) of the Pilbara Harmonised Technical Rules (HTR) for the Port Hedland Solar Farm (SF) that will be connected at 33 kV side of generator step-up transformer within APA's existing Port Hedland Power Station.

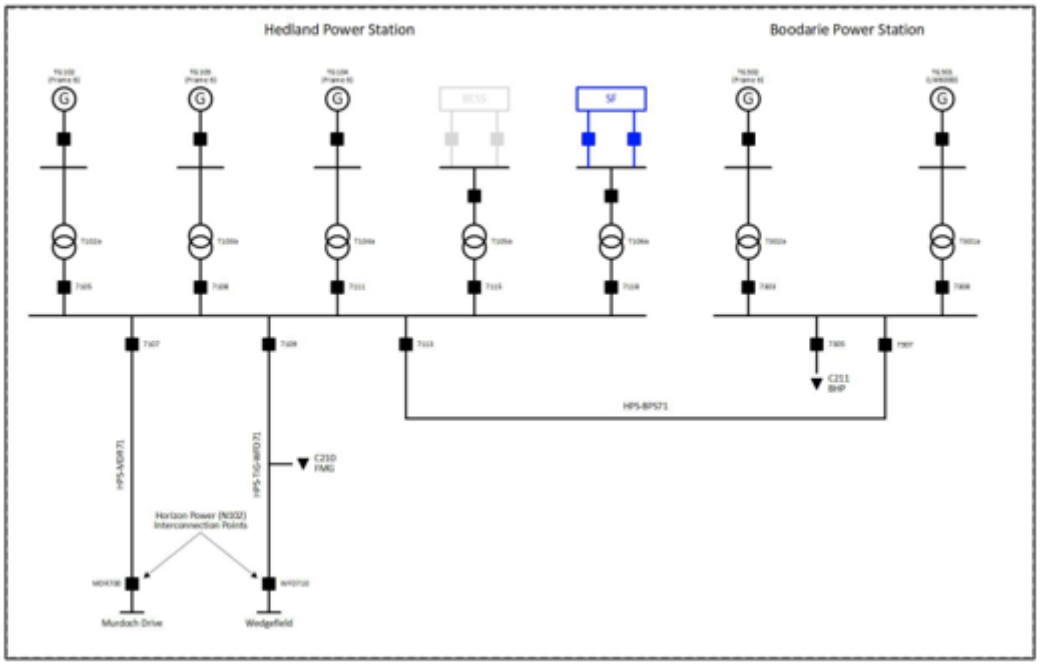

Figure 1 Overview of Porth Hedland solar farm connection

The NSP has reviewed the Access Applicant's request and consulted with the ISO. The NSP is satisfied that the exemptions, are reasonably granted accordance with Good Electricity Industry Practice (**GEIP**) and would not adversely impact Security, Reliability, or the Pilbara Electricity Objective.[1]

The NSP is seeking submissions in relation to the exemption request under an Expedited Consultation Process.

2. Exemption request

Clause 3.3.3.3 of the Harmonised Technical Rules relates to Generating unit response to disturbances in the power system.

Clause 3.3.3.3(f) states:

> "**Post-fault reactive power of a power station with non-synchronous generating units:**

After fault clearing, the power station in which a non-synchronous generating unit is located must not absorb reactive power from the transmission system or the distribution system. Any pre-fault absorption of reactive power has to be terminated within 200 ms after clearing of the fault. The

[1] Under Part 8A of the *Electricity Industry Act 2004*, the Pilbara Electricity Objectives is to is to promote efficient investment in, and efficient operation and use of, services of Pilbara networks for the long-term interests of consumers of electricity in the Pilbara region in relation to —
(a) price, quality, safety, reliability and security of supply of electricity; and
(b) the reliability, safety and security of any interconnected Pilbara system.

APA-INTERNAL

absorption is permitted to recommence, if required by the applicable voltage control strategy, after the postfault voltages stabilise for at least 60 seconds at an above nominal value."

The Access Applicant has requested a modified requirement be applied in lieu of 3.3.3.3(f) of the Harmonised Technical Rules as per following:

"After fault clearing the Port Hedland Solar Farm will revert to its normal Point of Connection (PoC) voltage droop control mode once the generating unit has exited the Low Voltage Ride Through mode (LVRT exits when the PoC voltage exceeds 0.85pu for more than 200ms and the inverter terminal voltage has exceeded 0.88pu).

Supply or absorption of reactive power following fault clearance and LVRT exit is subject to the current rating of the generating unit, the pre-fault active power and reactive power, the voltage setpoint and post-fault voltage."

3. Consultation with ISO

The NSP and the Access Applicant are part of a Vertically Integrated NSP. As such, the NSP cannot grant an exemption without approval from the ISO.[2] Further, as the Facility is greater than 10 MVA, the NSP must consult with the ISO regarding the proposed exemptions.[3]

The NSP has consulted with the ISO regarding the Access Applicant's request for exemption in accordance with sections 64(3) and 64(4) of the Pilbara Network Rules.

In accordance with section 64(6) of the Pilbara Network Rules, the ISO must advise the NSP:

a) Whether the exemption is or is not likely to cause or contribute to any adverse impact on Security, Reliability or the Pilbara Electricity Objective, and
b) Whether the exemption is or is not consistent with the constrained access regime in Subchapter 9.1 of the Pilbara Network Rules; and
c) of any conditions the ISO recommends be placed on the exemption.

ISO has provided its final advice on this exemption request.

The NSP has published ISO's letter of advice in conjunction with this draft decision to ensure stakeholders have access to relevant information during the consultation process.

4. Draft decision

The NSP is satisfied the exemption, if subject to conditions outlined below, is reasonably granted in accordance with GEIP and would not adversely impact Security, Reliability, or the Pilbara Electricity Objective.

In making this decision, the NSP has considered the following points:

— The equivalent clauses in Appendix 12 of the Wholesale Electricity Market Rules (A12.9.2.5 and A12.9.3.6) allow asynchronous generators to negotiate a more relaxed standard than the requirement in the Harmonised Technical Rules;
— Increasing the size of power conversion equipment to meet the Harmonised Technical Rules clause would be contrary to the Pilbara Electricity Objective.

The NSP's draft decision is to accept the exemption conditional on the Connection Applicant meeting the modified requirement outlined in section 2 and subject to following:

If testing conducted through the Generation Monitoring Plan under HTR cl. 4.1.3 or other fault recordings shows that the facility performs better than outlined in this exemption, the exemption will be reconsidered.

[2] Refer to section 64(3) of the Pilbara Network Rules.
[3] Refer to section 64(4) of the Pilbara Network Rules.

APA-INTERNAL

5. Request for submissions

The NSP invites written submissions on the Access Applicant's request and this draft decision.

Submission must be provided by 5:00pm WST on 19 December 2025. Any submissions not marked as confidential will be published on APA's website.

Submission should be emailed to: nwisnetworkaccessenq@apa.com.au

APA-INTERNAL