APA

Australia's energy infrastructure partner

Port Hedland Solar Farm: Exemption from 3.3.3.3.h(2) of the Harmonised Technical Rules

Final Decision

18 June 2025



Contents

1. Executive Summary **2**

2. Exemption application **3**

2.1. Regulatory framework 4

3. Draft decision **5**

3.1. Stakeholder submissions 5

4. Consultation with ISO **6**

4.1. ISO advice 6

5. Final decision **7**

1. Executive Summary

The Access Applicant (ADEWAP Pty Ltd in its capacity as a generator) is seeking connection for the Port Hedland Solar Farm (SF) within APA's existing Port Hedland Power Station at 33 kV and is seeking an exemption under part 64(1) of the Pilbara Network Rules (PNR) from clause 3.3.3.3.h(2) of the Harmonised Technical Rules (HTR).

ADEWAP Pty Ltd in its capacity as a Registered Network Service Provider (NSP) has reviewed and consulted on the proposed exemption, including seeking advice and approval from the Pilbara independent system operator (ISO) on whether it believes that it should be granted.

The NSP is satisfied that the exemption:

— is in accordance with Good Electricity Industry Practice (GEIP); and
— will not have any effect on the Registered NSPs and Network Users of its Network or any Network in the Power System.

In its advice, the ISO has recommended condition for granting the exemption. The NSP is satisfied that the Access Applicant's proposed exemption accommodates these conditions as detailed in section 4.1.

The NSP's Final Decision is to grant the ADEWAP Pty Ltd an indefinite exemption from clause 3.3.3.3.h(2) of the Harmonised Technical Rules for the purposes of connecting the Port Hedland Solar Farm to the Port Hedland Power Station.

2. Exemption application

ADEWAP Pty Ltd in its capacity as a Registered Network Service Provider (NSP) received an exemption request from an Access Applicant (ADEWAP Pty Ltd in its capacity as a generator).

The Access Applicant is seeking to connect the Port Hedland BESS with APA's existing Port Hedland Power Station at 33kV as shown in figure 1. In accordance with the HTR, the generating unit is considered to remain in uninterrupted operation if following a disturbance in power system, the active power output returns to the generating unit's pre-fault electric power output within 200 milliseconds after the voltage has returned to between 80% to 110% of nominal voltage.

Figure 1 Overview of Port Hedland Solar Farm Connection

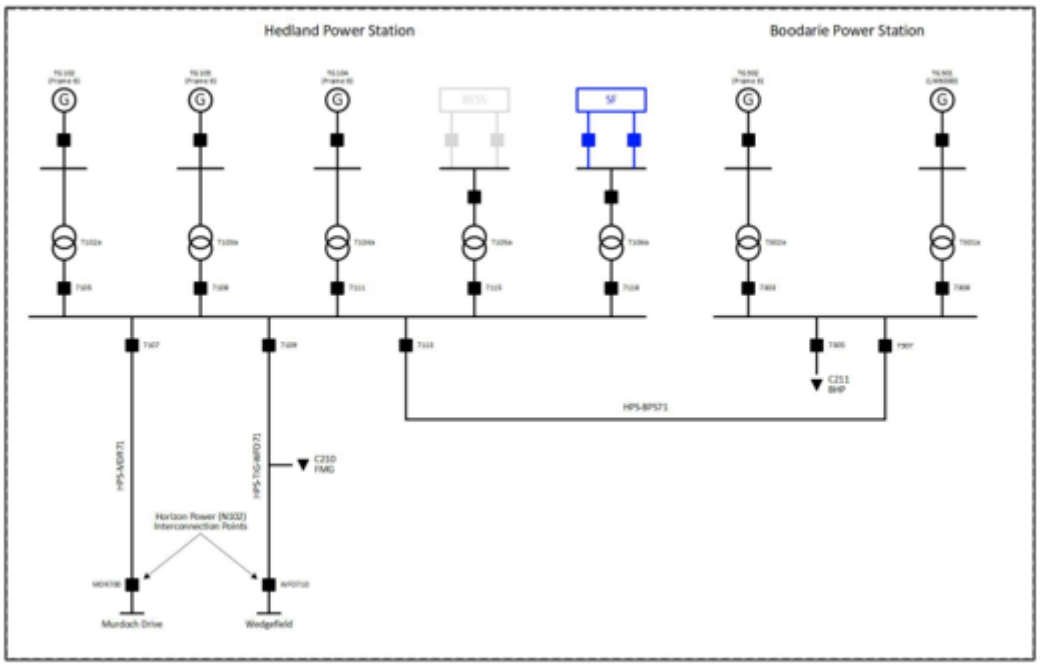

The Access Applicant's solar farm facility's control strategy prioritises reactive current injection over active power during low-voltage events, to support voltage recovery. The facility's control strategy, combined with the requirement for stable active power control across all credible operating scenarios has demonstrated the active power recovery slightly below 100% within 200 milliseconds following fault clearance. Oversizing power conversion equipment to deliver maximum active power at 80% voltage would lead to significantly increased capital costs, which is inconsistent with the Pilbara Electricity Objective.

The Access Applicant is seeking an exemption from clause 3.3.3.3.h(2) of the HTR using part 64(1) of the PNR with a modified requirement be applied in lieu of 3.3.3.3(h)(2) of the Harmonised Technical Rules as per the following table.

Table 1 Rule requirement and requested modified requirement for Solar Farm

Aspect	Clause 3.3.3.3(h)(2) requirement	Requested modified requirement
Voltage recovery range	80-110%	90-110%
Active Power Recovery	Return to the pre-fault value (100%)	Return to 99% of the pre-fault value
Time Requirement for Power Recovery	200 ms	200 ms

2.1. Regulatory framework

The PNR establish rules for the operation, management, security and reliability of Pilbara networks and the functions of the ISO. The PNR incorporates the HTR which describe the technical performance requirements of the power system, and the obligations of network service providers to provide transmission and distribution systems that achieve these requirements.

Clause 3.3.3.3.h(2) of the HTR relates to continuous uninterrupted operation for generation facilities that are used to manage the risk that a generating unit is not disconnected from the power system following a disturbance and provides continuous operation.

Clause 3.3.3.3.h states that:

> *For the purposes of this clause, a generating unit is considered to remain in continuous uninterrupted operation if:*
>
> *(1) the generating unit is not disconnected from the network due to protection system operation.*
> *(2) the active power output returns to the generating unit's pre-fault electric power output within 200 milliseconds after the voltage has returned to between 80% to 110% of nominal voltage. In making this assessment allowances may be made for:*
> *1. any variation in active power output for non-synchronous generating units due to variation in the primary source of energy; and*
> *2. any variation in active power output of synchronous generating units due to any reduction in the power system frequency in accordance with the capability of the generating unit as notified to the NSP.*
> *(3) the reactive power control mode in which the generating unit was operating prior to the credible contingency event occurring does not change, unless it is required by subclause 3.3.3.3(f).”*

The procedures for the application and granting of an exemption from one or more requirements of the HTR are outlined in Part 64 of the PNR.

As the Facility in question is greater than 10 MVA, the NSP must consult with the ISO regarding the proposed exemption.[1] Furthermore, the NSP and the Access Applicant are also part of a Vertically-Integrated NSP and as such, the NSP cannot grant an exemption without approval from the ISO[2].

Consequently, the NSP has consulted with the ISO regarding the Access Applicant’s request for exemption in accordance with sections 64(3) and 64(4) of the PNR.

[1] Refer to section 64(4) of the Pilbara Network Rules.
[2] Refer to section 64(3) of the Pilbara Network Rules.

3. Draft decision

The NSP released its Draft decision on the 22 May 2025[3] that proposed granting the Access Applicant an exemption from clause 3.3.3.3.h(2) of the HTR for an indefinite period.

The NSP was satisfied that the exemption should be granted in accordance with GEIP and as increasing the size of power conversion equipment to meet the HTR clause would be contrary to the Pilbara Electricity Objective.

The NSP concurs with the Access Applicant's assessment that the worst-case post-fault active power shortfall—0.18 MW at 200 ms for a post-fault voltage of 90% does not pose a credible impact on the active power supply-demand balance.

Additionally, grid code in other regions like Wholesale Electricity Market in the Southwest Interconnected System (SWIS) allow asynchronous generators to negotiate a more relaxed standard than the requirement in the HTR.

Consequently, the facility has been optimised to deliver a fast and stable active power response across the entire spectrum of credible system strength condition.

The proposed exemption would not have any effect on the Registered NSPs and Network Users of its Network or any Network in the Power System.

Consultation on the Draft decision was open for submissions until the 17 June 2025 in accordance with the Expedited Consultation Process[4].

3.1. Stakeholder submissions

The NSP did not receive any submission on draft-decision from external stakeholders during the public consultation period.

[3] 250522_draft_decision_ph_solar_farm_htr_exemption_3333h2.pdf
[4] Refer to section A1.3 of the Pilbara Network Rules

4. Consultation with ISO

APA DEWAP has worked closely with the ISO throughout the access and connection process for the Port Hedland Solar Farm.

On 7 May 2025, the NSP requested the ISO review the Access Applicant's request for exemption from clause 3.3.3.3.h(2) of the HTR in accordance with sections 64(3) and 64(4) of the PNR and confirm whether the exemption poses any security risks and that it can be granted.

Under section 64(6), the ISO must as soon as practicable, and in any event within 4 weeks of the consultation commencing, determine, and advise the Registered NSP:

a. Whether the exemption is or is not likely to cause or contribute to any adverse impact on Security, Reliability or the Pilbara Electricity Objective;
b. Whether the exemption is or is not consistent with the constrained access regime in Subchapter 9.1 of the Pilbara Network Rules; and
c. of any conditions the ISO recommends be placed on the exemption.

4.1. ISO advice

The ISO provided its advice[5] on APA DEWAP's exemption request for the Port Hedland Solar Farm from HTR clause 3.3.3.3.h(2) on the 20 May 2025.

The ISO concluded that:

— the exemption is not likely to cause or contribute to any adverse impact on System Security, Reliability or the Pilbara Electricity Objective.

  The ISO accepts the Access Applicant's position regarding the exemption application and acknowledge there is no significant impact on power system stability and reliability. The maximum active power fluctuation of 0.18 MW represents less than 1% of the NWIS minimum load (~140 MW) and 6.6% of the current 20 MW regulation reserve, posing no significant impact to power system stability or reliability. Additionally, an 80% post-fault voltage recovery event is considered non-credible as per the WAN studies. The 80% post-fault voltage recovery scenario is currently considered unlikely due to the facility's electrical proximity to the gas turbines at Port Hedland Power Station, which provide voltage stabilisation during worst-case fault events.

— the exemption is consistent with the constrained network access[6] framework in the PNR.

  The ISO considered that the change will not impact known existing constraints or the ability of other facilities on the Registered NSP network to respond to constraint directions issued under the constrained network access regime.

  Further, the exemption does not identify or interact with any legacy rights, build-out rights or other rights contemplated in subchapter 9.1 of the PNR.

In summary, the ISO considered the exemption may be granted but recommended the following conditions be placed on the Access Applicant:

1. If testing conducted through the Generation Monitoring Plan under HTR cl 4.1.3 or other fault recordings shows that the facility performs better than outlined in this exemption, the exemption will be reconsidered.

[5] 250516_isos_advice_on_apa_exemption_htr_clause_3333h2.pdf
[6] Subchapter 9.1 of the HTR - Constrained network access

5. Final decision

The NSP's Draft decision was to grant the Access Applicant an exemption from clause 3.3.3.3.h(2) of the HTR for an indefinite period with no proposed conditions.

The NSP is satisfied that the exemption:

— is granted in accordance with GEIP and Pilbara Electricity Objectives for the active power of the facility to return to 99% of the pre-fault value for the voltage recovery range of 90 – 110% ensures the continuous uninterrupted operation as intended to be managed through compliance with clause 3.3.3.3.h(2) of the HTR; and
— will not have any effect on the Registered NSPs and Network Users of its Network or any Network in the Power System.

The ISO has also provided its advice on the exemption request including recommending a condition for granting the exemption.

In making its decision, the NSP has considered its consultation with stakeholders and the advice received from the ISO, including its accompanying conditions. The NSP is satisfied that the Access Applicant's proposal for exemption fully accommodates the conditions proposed by the ISO.

The NSP's Final Decision is therefore to grant the exemption from clause 3.3.3.3.h(2) of the HTR subject to following condition:

1. If testing conducted through the Generation Monitoring Plan under HTR cl. 4.1.3 or other fault recordings shows that the facility performs better than outlined in this exemption, the exemption will be reconsidered.

The exemption is granted for an indefinite period.

